Honda CBR1000RR ('08-'11)

ENGINE SLIDERS

part# H-CBR108ES

[L]

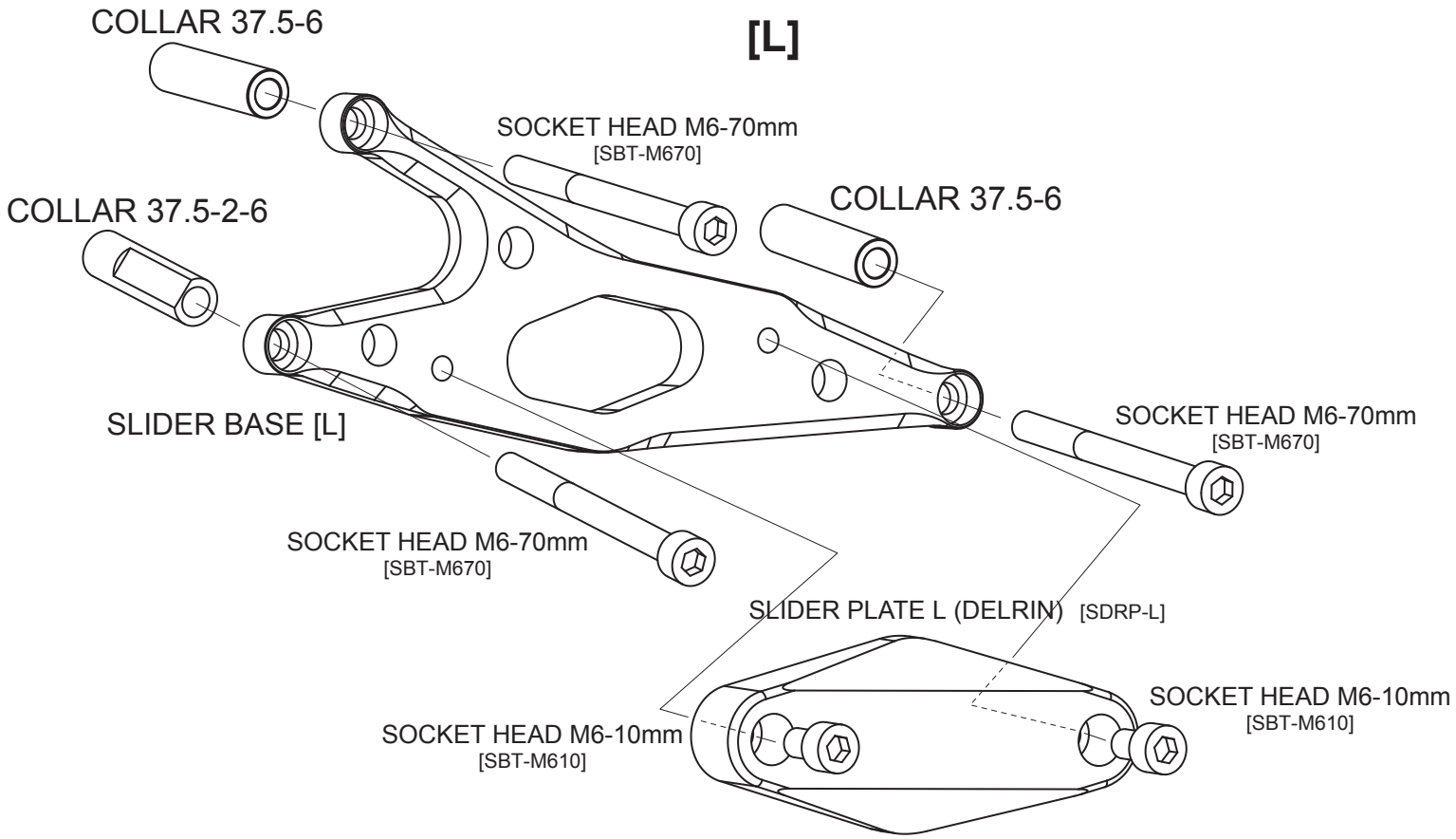
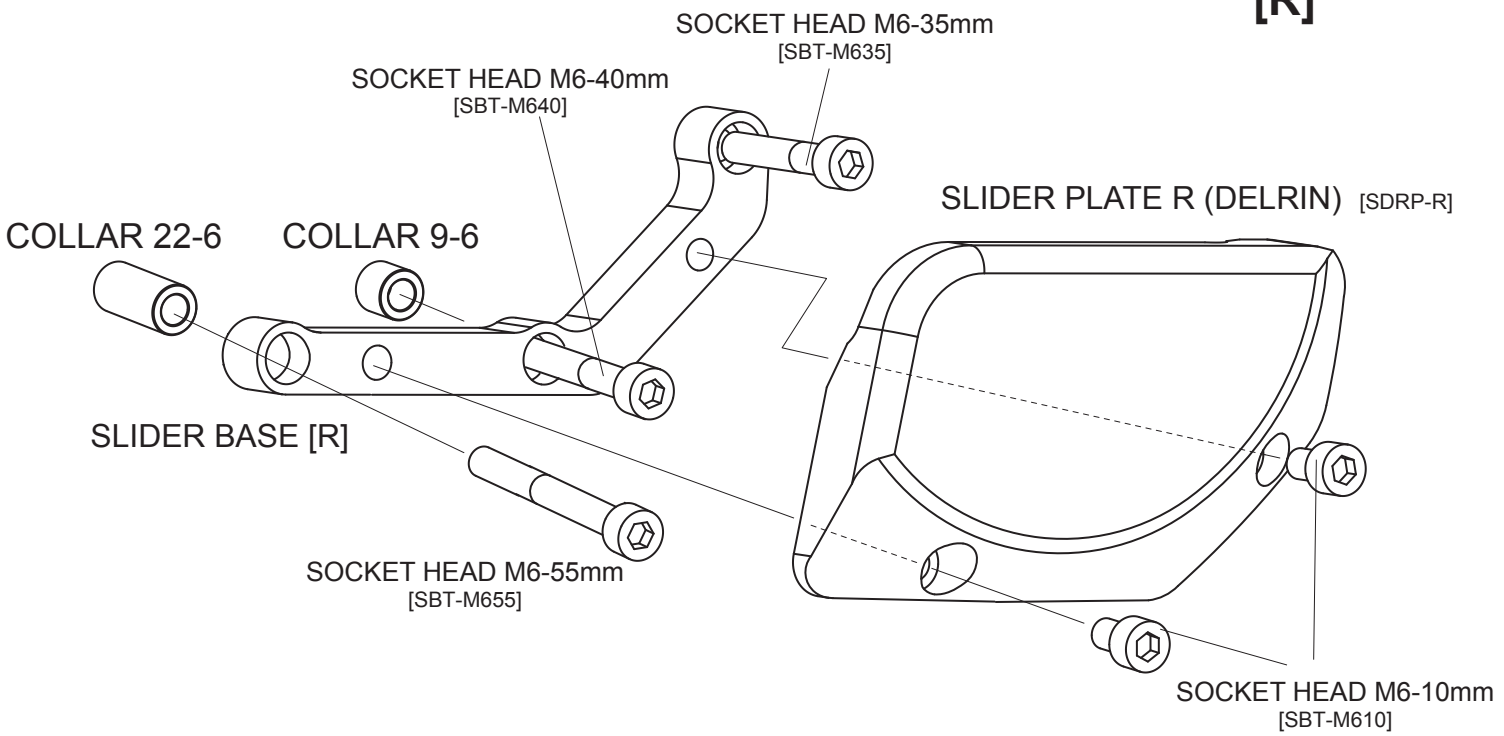
[R]